Hillmar
Hillmar Industries Ltd.
7371 Vantage Way
Delta, BC V4G 1C9
P:604 946-7115 F:604 946-0329
info@hillmar.com www.hillmar.com

HYD PWR UNIT 08-SBS4EN
HPT08-SBS4EN-MB1V3-150PR5
SPECIFICATION SHEET
SLS & MKTG
ENGLISH

Sheet Number:			
Job Number:			
Form Number: 129-516-73147PT			
Company / Project Reference:	Date.:	Page.: 1 OF 1	Document Package No.: / Rev.:

Inventor Drawing

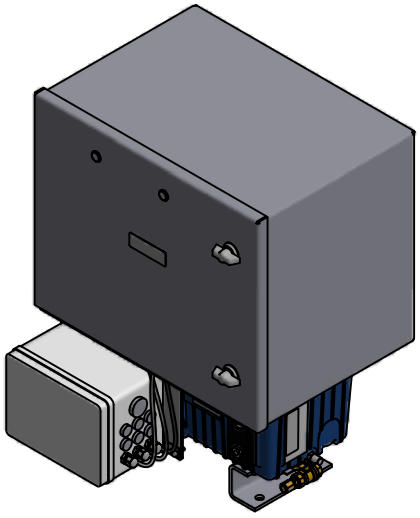

FEATURE	CODE
Hydraulic power unit	HPT
Oil volume	08
Storm brake	SB
Enclosure SS304	S4EN
Manifold	MB1V3
Motor - pump	150PR5

Example for ordering
HPT08-SBS4EN-MB1V3-150PR5

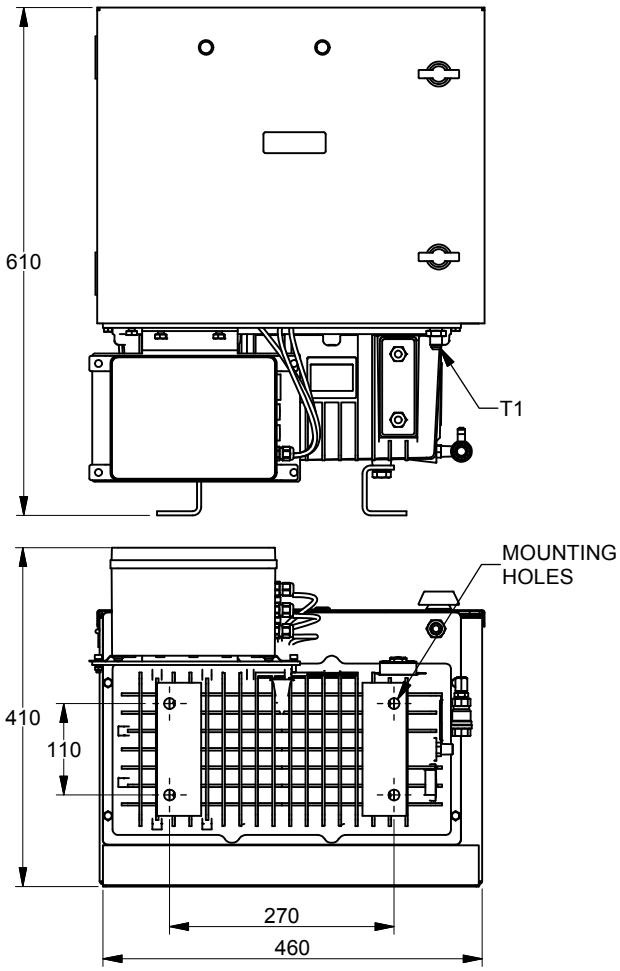

TECHNICAL DATA

Motor size (kW)	1.5
Oil volume (L)	8
Maximum pressure (MPa)	18
Nominal flow 50/60 Hz (l/min)	4.8/5.76
Hydraulic fittings (oil supply) T1	-6 37° JIC
Mounting holes	4 x Ø13
Mounting bolts (CL8.8)	4 x M12
Tightening torque (Nm)	55
Weight w/o oil (kg)	91

NOMINAL SPECIFICATION

Die cast reservoir.

Stainless steel enclosure.

Gear pump and high-pressure outlet filter.

Circuit manifold having check-valve, relief valve, normally open solenoid valve with manual override, pressure gauge with isolation valve, flow control, motor cut-out pressure switch, accumulator with flow control valve.

Control voltage electrical junction box connection to be drilled to suit requirements by customer.

For electrical motor junction box connection see motor specification sheet for details.

NOTES

Hillmar power units can be customized to suit customer's special requirements

All figures are nominal figures only

Document Template #710-101-62058

** ALL TECHNICAL DATA IS SUBJECT TO CHANGE WITHOUT NOTICE **
Hillmar works have a fully registered ISO 9001-2008 quality assurance programme (QCB #01-1525)

C:\TEMP\35d16713-7e4d-41ac-90b2-19d4add1c7a\8000051924\1\HILLMAR\HILLMAR PRODUCTION\01 HYD PWR UNIT\0700-1\07001001 HPT-SB\SPC-SHT-HPT-XXSB\73147 HPT08-SBS4EN-MB1V3-150PR5.idw